6104-011

Work Order ID 144113

144113

PRELIMINARY ISSUE

Page 1

Monday, April 04, 2016 10:43:56 AM

Item ID: D5380-1TRN
Revision ID: PRELIM
Item Name: Support

POSITIVE RECALL

Accept *N900040100*

Setup Start *NS1*
Stop *NS2*

Start Date: 4/6/2016 **Start Qty:** 2.00 *2*
Required Date: 4/15/2016 **Req'd Qty:** 2.00 *2*
Reference:

Cust Item ID:
Customer:

Approvals: **Process Plan:** MLS **Date:** APR 0 4 2016 **Tooling:** _____ **Date:** _____
QC: _____ **Date:** _____ **SPC (Y/N):** _____ **Date:** _____

Run Start *NR1*
Stop *NR2*

Sequence ID/ Work Center ID	Operation Description	Set Up/ Run Hours	Tool ID	Tool #	Plan Code	Accept Qty	Reject Qty	Reject Number	Insp. Stamp
Draw Nbr D5380	**Revision Nbr** ~~PA4~~ ~~PA9~~ Rev A								
100 *100* Doosan Doosan Lathe	MORI SEIKI CNC LATHE LARGE	0.00				2	4		DAS 45 2016-4-8 9-89
	Memo Turn blank as per Folio FB459	0.02							
110 *110* QC Quality Control	QC2- Inspect parts off machine FAI/FAIB	0.00				2	4		DAS 45 2016-4-8 9-89
	Memo	0.00							
120 *120* QC Quality Control	QC8- Inspect parts - second check	0.00				2			2016-4-9
	Memo	0.00							

DART AEROSPACE

DQA: _____ Date: _____

WORK ORDER NON-CONFORMANCE / UPDATE

QA Closed: Date:

Work Order update only ☐

Work Order: _____

Part No. _____

NCR No.

DISPOSITION

- Rework ☐
- Scrap ☐
- Use-as-is ☐
- Suspected Unapproved ☐

AGAINST DEPARTMENT/PROCESS

Skid-tube ☐	Cross tube ☐	Water Jet ☐	Engineering ☐
Machining ☐	Small Fab ☐	Prod. Eng. Coor. ☐	Quality ☐
Thermoforming ☐	Finishing ☐	Rec/Store/Packaging ☐	Other ☐
Large Fab ☐	Composite ☐	Supplier ☐	

Date :	Step #:	QTY Effective :	MRB (QSI042) Approval

Description Work Order Deviation	Disposition	
		Completed By
		Lead hand / Supervisor Approval Verification
		QC / QA Coordinator Approval

Root Cause

Environment	☐	☐	No Re-verfication
Design	☐	☐	Operator
Doc/Data	☐	☐	Offset/Setup
Equip/Tooling	☐	☐	Supplier
Handling/Pre	☐	☐	Training
Material	☐	☐	Use for Testing
Internal Transport	☐	☐	Poor Information
Tribal Knowledge	☐	☐	Rushing
LOA	☐	☐	Product Improvement
Substation	☐	☐	Process Improvement
Past Expiry Date	☐	☐	Manufacturing Process
Misidentified	☐	☐	Past Due

FAULT CATEGORY

☐ Pressure/Forced	☐ Temperature/Cure	☐ Power Loss/Surge	☐ Positioned Wrong
☐ Bending	☐ Set-up	☐ Folio/Program	☐ Outside Dimensions
☐ Centre Not Concentric	☐ BOM/Route	☐ Grain	☐ Over/Under tolerance
☐ Cracks	☐ Broken/Damage/Defect	☐ Weld	☐ Part Incorrect
☐ Crimp/Kink/Ripple/Wave	☐ Inspection Incomplete/Unqualified	☐ Wrong Stock Pulled	☐ Part Lost/Missing
☐ Cuffs	☐ Contamination	☐ Out of Sequence	☐ Part Moved
☐ Crushing	☐ Countersink	☐ Off-set	☐ Drawing
☐ Heat Treat	☐ Cut Too Short	☐ Mislabeled	☐ Finish
☐ Wave/Twist in Tube	☐ Instructions Incomplete/Unclear	☐ Fit/Function	☐ Misread
☐ Marks/Chatter	☐ Drill Holes	☐ Misaligned/off center	☐ Turning Sequence

☐ OTHER :

PRELIMINARY ISSUE

Work Order ID 144113

Monday, April 04, 2016 10:43:56 AM

144113

Item ID: D5380-1TRN
Revision ID: PRELIM
Item Name: Support

Accept *N900040100*

Setup Start *NS1*
Stop *NS2*

Start Date: 4/6/2016 **Start Qty:** 2.00 *2*
Required Date: 4/15/2016 **Req'd Qty:** 2.00 *2*
Reference:

Cust Item ID:
Customer:

Approvals: **Process Plan:** _____ **Date:** _____ **Tooling:** _____ **Date:** _____
QC: _____ **Date:** _____ **SPC (Y/N):** _____ **Date:** _____

Run Start *NR1*
Stop *NR2*

Sequence ID/ Work Center ID	Operation Description	Set Up/ Run Hours	Tool ID	Tool #	Plan Code	Accept Qty	Reject Qty	Reject Number	Insp. Stamp
130	Packaging	0.00							
130 Packaging									JL 16-4-9
Packaging	**Memo** LOCATION: MAT060	0.00							
140	QC21- Final Inspection - Work Order Release	0.00					16/5/26		
140 QC									
Quality Control	**Memo**	0.00							

MCJ APR 1 1 2016

POSITIVE RECALL
EFFECTIVE APR 0 4 2016 AUTH MCJ
RELEASED 9 DATE 160525
ENG7105APR-HELISERVICIO

DART AEROSPACE

DQA: _____ Date: _____

WORK ORDER NON-CONFORMANCE / UPDATE

QA Closed: Date:

Work Order update only ☐

Work Order: _____ Part No. _____ NCR No.	**DISPOSITION** Rework ☐ Scrap ☐ Use-as-is ☐ Suspected Unapproved ☐	**AGAINST DEPARTMENT/PROCESS** Skid-tube ☐ Cross tube ☐ Water Jet ☐ Engineering ☐ Machining ☐ Small Fab ☐ Prod. Eng. Coor. ☐ Quality ☐ Thermoforming ☐ Finishing ☐ Rec/Store/Packaging ☐ Other ☐ Large Fab ☐ Composite ☐ Supplier ☐

Date :	Step #:	QTY Effective :	MRB (QSI042) Approval

Description Work Order Deviation	Disposition	
		Completed By
		Lead hand / Supervisor Approval Verification
		QC / QA Coordinator Approval

Root Cause				FAULT CATEGORY			
Environment	☐	☐	No Re-verfication	☐ Pressure/Forced	☐ Temperature/Cure	☐ Power Loss/Surge	☐ Positioned Wrong
Design	☐	☐	Operator	☐ Bending	☐ Set-up	☐ Folio/Program	☐ Outside Dimensions
Doc/Data	☐	☐	Offset/Setup	☐ Centre Not Concentric	☐ BOM/Route	☐ Grain	☐ Over/Under tolerance
Equip/Tooling	☐	☐	Supplier	☐ Cracks	☐ Broken/Damage/Defect	☐ Weld	☐ Part Incorrect
Handling/Pre	☐	☐	Training	☐ Crimp/Kink/Ripple/Wave	☐ Inspection Incomplete/Unqualified	☐ Wrong Stock Pulled	☐ Part Lost/Missing
Material	☐	☐	Use for Testing	☐ Cuffs	☐ Contamination	☐ Out of Sequence	☐ Part Moved
Internal Transport	☐	☐	Poor Information	☐ Crushing	☐ Countersink	☐ Off-set	☐ Drawing
Tribal Knowledge	☐	☐	Rushing	☐ Heat Treat	☐ Cut Too Short	☐ Mislabeled	☐ Finish
LOA	☐	☐	Product Improvement	☐ Wave/Twist in Tube	☐ Instructions Incomplete/Unclear	☐ Fit/Function	☐ Misread
Substation	☐	☐	Process Improvement	☐ Marks/Chatter	☐ Drill Holes	☐ Misaligned/off center	☐ Turning Sequence
Past Expiry Date	☐	☐	Manufacturing Process				
Misidentified	☐	☐	Past Due	☐ OTHER :			

Picklist Print

Monday, April 04, 2016 10:44:02 AM

PRELIMINARY ISSUE

T

Work Order ID: 144113

144113

Parent Item: D5380-1TRN

D5380-1TRN

Parent Item Name: Support

Start Date: 4/6/2016 **Required Date:** 4/15/2016

Start Qty: 2.00 **Required Qty:** 2.00

Comments: IPP REV.A NEW ISSUE JFS 16/02/02 VERIFIED BY: DD

Component Item ID/ Item Name	Replacement Item ID	Mfg/ Purch	Bin Item	Primary Location	Last Location	Route Seq ID	Unit of Measure	Qty on Hand	Qty per Kit	Total Qty	Qty Issued	Date Issued	Status
D6104-011		Manufactured	No			100	Each	16.0000	1	2			
D6104-011									**				
17-4 SS Roundbar 6.50"OD													

Location	Loc Qty	Loc Code
MAT043	16	
139232	6	
142140	10	

2

DAS
45 2016-4-7
9-89

DART AEROSPACE

DQA: _____ Date: _____

WORK ORDER NON-CONFORMANCE / UPDATE

QA Closed: Date:

Work Order update only ☐

Work Order: _____ Part No. _____ NCR No.	**DISPOSITION** Rework ☐ Scrap ☐ Use-as-is ☐ Suspected Unapproved ☐	**AGAINST DEPARTMENT/PROCESS** Skid-tube ☐ Cross tube ☐ Water Jet ☐ Engineering ☐ Machining ☐ Small Fab ☐ Prod. Eng. Coor. ☐ Quality ☐ Thermoforming ☐ Finishing ☐ Rec/Store/Packaging ☐ Other ☐ Large Fab ☐ Composite ☐ Supplier ☐

Date :	Step #:	QTY Effective :	MRB (QSI042) Approval

Description Work Order Deviation	Disposition	
		Completed By
		Lead hand / Supervisor Approval Verification
		QC / QA Coordinator Approval

Root Cause				FAULT CATEGORY			
Environment	☐	☐	No Re-verfication	☐ Pressure/Forced	☐ Temperature/Cure	☐ Power Loss/Surge	☐ Positioned Wrong
Design	☐	☐	Operator	☐ Bending	☐ Set-up	☐ Folio/Program	☐ Outside Dimensions
Doc/Data	☐	☐	Offset/Setup	☐ Centre Not Concentric	☐ BOM/Route	☐ Grain	☐ Over/Under tolerance
Equip/Tooling	☐	☐	Supplier	☐ Cracks	☐ Broken/Damage/Defect	☐ Weld	☐ Part Incorrect
Handling/Pre	☐	☐	Training	☐ Crimp/Kink/Ripple/Wave	☐ Inspection Incomplete/Unqualified	☐ Wrong Stock Pulled	☐ Part Lost/Missing
Material	☐	☐	Use for Testing	☐ Cuffs	☐ Contamination	☐ Out of Sequence	☐ Part Moved
Internal Transport	☐	☐	Poor Information	☐ Crushing	☐ Countersink	☐ Off-set	☐ Drawing
Tribal Knowledge	☐	☐	Rushing	☐ Heat Treat	☐ Cut Too Short	☐ Mislabeled	☐ Finish
LOA	☐	☐	Product Improvement	☐ Wave/Twist in Tube	☐ Instructions Incomplete/Unclear	☐ Fit/Function	☐ Misread
Substation	☐	☐	Process Improvement	☐ Marks/Chatter	☐ Drill Holes	☐ Misaligned/off center	☐ Turning Sequence
Past Expiry Date	☐	☐	Manufacturing Process				
Misidentified	☐	☐	Past Due	☐ OTHER :			

DART AEROSPACE LTD	Work Order:	144113
Description: SUPPORT	Part Number:	DS380-1 TRN
Inspection Dwg: DS380 Rev: A9		Page 1 of 1

INSPECTION SHEET

Drawing Dimension	Tolerance	Actual Dimension	Accept	Reject	Method of Inspection	Comments
		LATHE SECTION				
6.6	+/-0.03	6.599	✓		Hb	31016
4.000	+/-0.010	3.998	✓		caliper	JK-01
1.370	+/-0.010	1.369	✓		Hb	31016
1.00	+.25/-0.00	1.080	✓		caliper	JK-01
3.280	+.010/-0.00	3.282	✓		"	"
4.30	+/-0.03	4.300	✓		"	"
r.03	+/-0.03	r.032	✓		radb	Shop
0.630	+/-0.010	0.630	✓		Calpi	JK-01
1.260	+/-0.010	1.260	✓		"	"

DAS 45 9-89

Measured by:		Checked by:	JL	QC Inspector:	
Date:	2016-4-8	Date:	16-4-10	Date:	

Engineering Approval: (If necessary)		Date:	

Rev	Date	Change	Revised by	Approved
B	14.07.31	New Issue	KJ	

DART AEROSPACE

DQA: _____ Date: _____

WORK ORDER NON-CONFORMANCE / UPDATE

QA Closed: Date:

Work Order update only ☐

Work Order: _____	**DISPOSITION**	**AGAINST DEPARTMENT/PROCESS**	
Part No. _____	Rework ☐	Skid-tube ☐	Cross tube ☐
	Scrap ☐	Machining ☐	Small Fab ☐
	Use-as-is ☐	Thermoforming ☐	Finishing ☐
NCR No.	Suspected Unapproved ☐	Large Fab ☐	Composite ☐

Water Jet ☐	Engineering ☐
Prod. Eng. Coor. ☐	Quality ☐
Rec/Store/Packaging ☐	Other ☐
Supplier ☐	

Date :	Step #:	QTY Effective :	**MRB (QSI042) Approval**

Description Work Order Deviation	**Disposition**	
		Completed By
		Lead hand / Supervisor Approval Verification
		QC / QA Coordinator Approval

Root Cause				**FAULT CATEGORY**			
Environment	☐	☐	No Re-verfication	☐ Pressure/Forced	☐ Temperature/Cure	☐ Power Loss/Surge	☐ Positioned Wrong
Design	☐	☐	Operator	☐ Bending	☐ Set-up	☐ Folio/Program	☐ Outside Dimensions
Doc/Data	☐	☐	Offset/Setup	☐ Centre Not Concentric	☐ BOM/Route	☐ Grain	☐ Over/Under tolerance
Equip/Tooling	☐	☐	Supplier	☐ Cracks	☐ Broken/Damage/Defect	☐ Weld	☐ Part Incorrect
Handling/Pre	☐	☐	Training	☐ Crimp/Kink/Ripple/Wave	☐ Inspection Incomplete/Unqualified	☐ Wrong Stock Pulled	☐ Part Lost/Missing
Material	☐	☐	Use for Testing	☐ Cuffs	☐ Contamination	☐ Out of Sequence	☐ Part Moved
Internal Transport	☐	☐	Poor Information	☐ Crushing	☐ Countersink	☐ Off-set	☐ Drawing
Tribal Knowledge	☐	☐	Rushing	☐ Heat Treat	☐ Cut Too Short	☐ Mislabeled	☐ Finish
LOA	☐	☐	Product Improvement	☐ Wave/Twist in Tube	☐ Instructions Incomplete/Unclear	☐ Fit/Function	☐ Misread
Substation	☐	☐	Process Improvement	☐ Marks/Chatter	☐ Drill Holes	☐ Misaligned/off center	☐ Turning Sequence
Past Expiry Date	☐	☐	Manufacturing Process				
Misidentified	☐	☐	Past Due	☐ OTHER :			

PRELIMINARY ISSUE

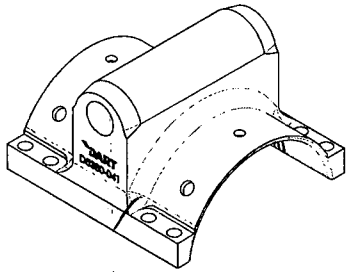

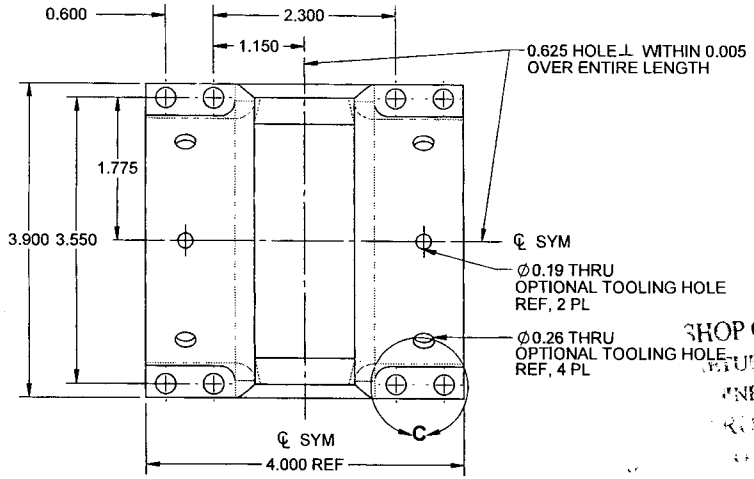

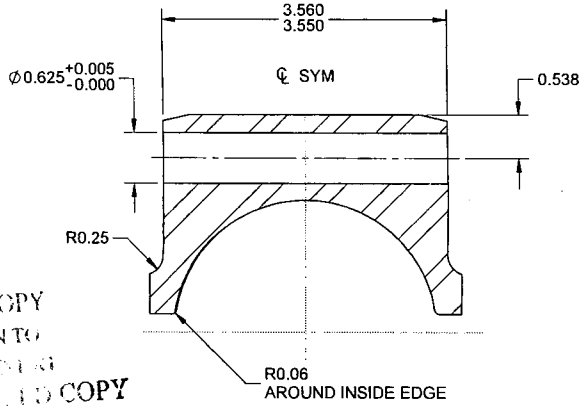

SECTION B-B
SCALE 1X

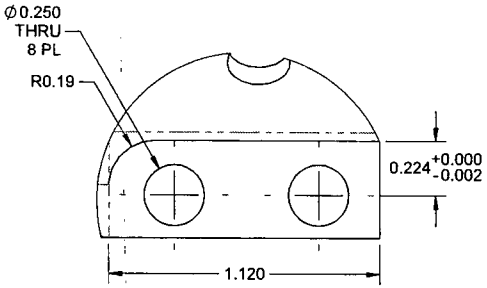

9 **DETAIL C**
SCALE 2X
4 PL

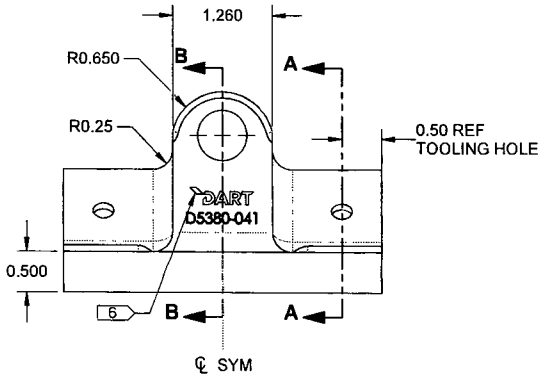

D5380-1 SUPPORT

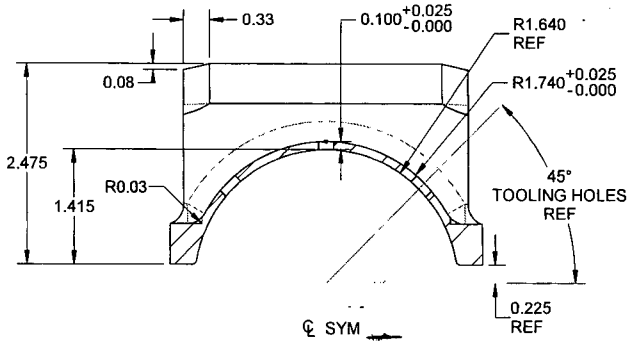

SECTION A-A
TOOLING HOLE DETAIL
SCALE 1X

NOTES:
1) MATERIAL: MAKE FROM D5380-1TRN
2) FINISH: NONE
3) TOLERANCES: PER DART QSI 018 UNLESS OTHERWISE NOTED
4) UNITS: INCHES UNLESS OTHERWISE NOTED
5) BREAK SHARP EDGES: 0.005 TO 0.010 MAX
6) IDENTIFICATION: DART LOGO AND P/N WITH 0.125 HIGH LETTERING AND 0.010-0.020 DEEP PER DART QSI 044 6.3
7) WEIGHT: 2.09 lbs
8) PROFILE ALL NON DIMENSIONED FEATURES PER CAD FILE "D5380-1-REVA.STP"
9) REMOVE MATERIAL FLUSH TO FACE

PRELIMINARY ISSUE

REV.	DESCRIPTION	BY	DATE
A	NEW ISSUE	ML	16.01.05

DESIGN	ML	**DART AEROSPACE LTD** HAWKESBURY, ONTARIO, CANADA	
DRAWN	ML		
CHECKED	AJS	DRAWING NO.	REV. A9
MFG. APPR.	JFS	D5380	SHEET 1 OF 4
APPROVED		TITLE	SCALE
DE APPR.		SUPPORT	NTS
DATE	16.01.05		

DART AEROSPACE

DQA: _____ Date: _____

WORK ORDER NON-CONFORMANCE / UPDATE

QA Closed: Date:

Work Order update only ☐

Work Order: _____ Part No. _____ NCR No.	**DISPOSITION** Rework ☐ Scrap ☐ Use-as-is ☐ Suspected Unapproved ☐	**AGAINST DEPARTMENT/PROCESS** Skid-tube ☐ Cross tube ☐ Water Jet ☐ Engineering ☐ Machining ☐ Small Fab ☐ Prod. Eng. Coor. ☐ Quality ☐ Thermoforming ☐ Finishing ☐ Rec/Store/Packaging ☐ Other ☐ Large Fab ☐ Composite ☐ Supplier ☐

Date :	Step #:	QTY Effective :	MRB (QSI042) Approval

Description Work Order Deviation	Disposition	
		Completed By
		Lead hand / Supervisor Approval Verification
		QC / QA Coordinator Approval

Root Cause				FAULT CATEGORY			
Environment	☐	☐	No Re-verfication	☐ Pressure/Forced	☐ Temperature/Cure	☐ Power Loss/Surge	☐ Positioned Wrong
Design	☐	☐	Operator	☐ Bending	☐ Set-up	☐ Folio/Program	☐ Outside Dimensions
Doc/Data	☐	☐	Offset/Setup	☐ Centre Not Concentric	☐ BOM/Route	☐ Grain	☐ Over/Under tolerance
Equip/Tooling	☐	☐	Supplier	☐ Cracks	☐ Broken/Damage/Defect	☐ Weld	☐ Part Incorrect
Handling/Pre	☐	☐	Training	☐ Crimp/Kink/Ripple/Wave	☐ Inspection Incomplete/Unqualified	☐ Wrong Stock Pulled	☐ Part Lost/Missing
Material	☐	☐	Use for Testing	☐ Cuffs	☐ Contamination	☐ Out of Sequence	☐ Part Moved
Internal Transport	☐	☐	Poor Information	☐ Crushing	☐ Countersink	☐ Off-set	☐ Drawing
Tribal Knowledge	☐	☐	Rushing	☐ Heat Treat	☐ Cut Too Short	☐ Mislabeled	☐ Finish
LOA	☐	☐	Product Improvement	☐ Wave/Twist in Tube	☐ Instructions Incomplete/Unclear	☐ Fit/Function	☐ Misread
Substation	☐	☐	Process Improvement	☐ Marks/Chatter	☐ Drill Holes	☐ Misaligned/off center	☐ Turning Sequence
Past Expiry Date	☐	☐	Manufacturing Process				
Misidentified	☐	☐	Past Due	☐ OTHER :			

PRELIMINARY ISSUE

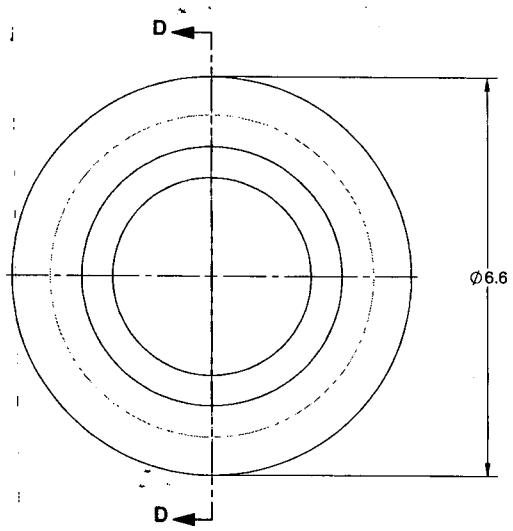

D5380-1TRN

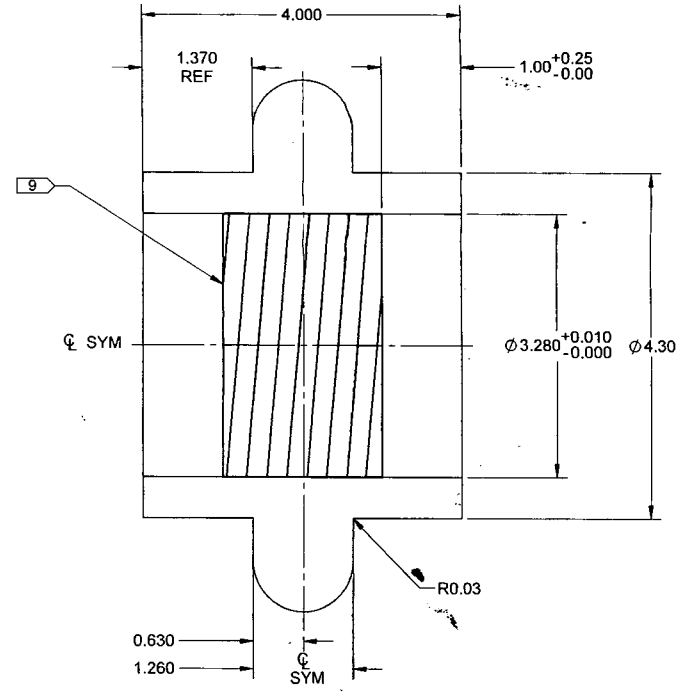

SECTION D-D
SCALE 1.5X

NOTES:
1) MATERIAL: 17-4 PH/S17400/TYPE 630 ROUND BAR PER AMS 5643 / ASTM A564
H900 OR H925 CONDITION, MIN UTS = 170 KSI (38 HRc)
REF DART SPEC. M17-4-R
2) FINISH: NONE
3) TOLERANCES: PER DART QSI 018 UNLESS OTHERWISE NOTED
4) UNITS: INCHES UNLESS OTHERWISE NOTED
5) BREAK SHARP EDGES: 0.005 TO 0.010 MAX
6) IDENTIFICATION: DART LOGO AND P/N WITH 0.125 HIGH LETTERING AND 0.010-0.020 DEEP PER DART QSI 044 6.3
7) WEIGHT: 13.21 lbs
8) PROFILE ALL NON DIMENSIONED FEATURES PER CAD FILE "D5380-1TRN-REVA.STP"
9) SURFACE IS TO BE THREADED USING R0.032 TOOLING AT A DEPTH OF 0.032 $^{+0.000}_{-0.016}$ WITH A PITCH OF 0.125$^{+0.010}_{-0.010}$

PRELIMINARY ISSUE

DESIGN	ML	**DART AEROSPACE LTD** HAWKESBURY, ONTARIO, CANADA
DRAWN	ML	
CHECKED	AJS	DRAWING NO. REV. A9
MFG. APPR.	JFS	D5380 SHEET 2 OF 4
APPROVED		TITLE SCALE
DE APPR.		SUPPORT NTS
DATE	16.01.05	

DART AEROSPACE

DQA: _____ Date: _____

WORK ORDER NON-CONFORMANCE / UPDATE

QA Closed: Date:

Work Order update only ☐

Work Order: _____ Part No. _____ NCR No.	**DISPOSITION** Rework ☐ Scrap ☐ Use-as-is ☐ Suspected Unapproved ☐	**AGAINST DEPARTMENT/PROCESS** Skid-tube ☐ Cross tube ☐ Water Jet ☐ Engineering ☐ Machining ☐ Small Fab ☐ Prod. Eng. Coor. ☐ Quality ☐ Thermoforming ☐ Finishing ☐ Rec/Store/Packaging ☐ Other ☐ Large Fab ☐ Composite ☐ Supplier ☐

Date :	Step #:	QTY Effective :	MRB (QSI042) Approval

Description Work Order Deviation	Disposition	
		Completed By
		Lead hand / Supervisor Approval Verification
		QC / QA Coordinator Approval

Root Cause				FAULT CATEGORY			
Environment	☐	☐	No Re-verfication	☐ Pressure/Forced	☐ Temperature/Cure	☐ Power Loss/Surge	☐ Positioned Wrong
Design	☐	☐	Operator	☐ Bending	☐ Set-up	☐ Folio/Program	☐ Outside Dimensions
Doc/Data	☐	☐	Offset/Setup	☐ Centre Not Concentric	☐ BOM/Route	☐ Grain	☐ Over/Under tolerance
Equip/Tooling	☐	☐	Supplier	☐ Cracks	☐ Broken/Damage/Defect	☐ Weld	☐ Part Incorrect
Handling/Pre	☐	☐	Training	☐ Crimp/Kink/Ripple/Wave	☐ Inspection Incomplete/Unqualified	☐ Wrong Stock Pulled	☐ Part Lost/Missing
Material	☐	☐	Use for Testing	☐ Cuffs	☐ Contamination	☐ Out of Sequence	☐ Part Moved
Internal Transport	☐	☐	Poor Information	☐ Crushing	☐ Countersink	☐ Off-set	☐ Drawing
Tribal Knowledge	☐	☐	Rushing	☐ Heat Treat	☐ Cut Too Short	☐ Mislabeled	☐ Finish
LOA	☐	☐	Product Improvement	☐ Wave/Twist in Tube	☐ Instructions Incomplete/Unclear	☐ Fit/Function	☐ Misread
Substation	☐	☐	Process Improvement	☐ Marks/Chatter	☐ Drill Holes	☐ Misaligned/off center	☐ Turning Sequence
Past Expiry Date	☐	☐	Manufacturing Process				
Misidentified	☐	☐	Past Due	☐ OTHER :			

Dart Aerospace Ltd.
1270 Aberdeen Street
Hawkesbury, ON K6A 1K7
Tel: 613 632 9577
Fax: 613 632 1053

PURCHASE ORDER

Purchase Order ID PO30498

Purchase Order Date 11/18/2015
PO Print Date 11/18/2015

Order From : VU-MET002

METAUX CASTLE
P.O. BOX 4090 STN A
TORONTO, ONTARIO M5W OE9
CANADA

Ship To : DART AEROSPACE LTD

1270 ABERDEEN
HAWKESBURY, ON K6A 1K7
CANADA

Contact Name
Vendor Phone

Ship To Contact
Ship To Phone
Ship Via: Yours ppd
Ship Acct:

Buyer Chantal Lavoie
Customer POID
Customer Tax # 10127-2607
Terms Net 30
Currency USD
FOB Destination-Collect

Line Total: **$1,899.00**

3	D6103-003P	Round Alum Billet	12/4/2015 Yes 12/4/2015	10.00 Each		$36.30	$363.00

AS PER DWG D6103 REV. B
B139231
MATERIAL: 7075-T7351 AS PER QQ-A-225/9
SIZE: 3.500" X 12.500" LONG

Line Total: **$363.00**

4	D6104-011P	17-4 SS Roundbar 6.50"Od	12/4/2015 Yes 12/4/2015	10.00 Each		$115.00	$1,150.00

AS PER DWG D6104 REV. B
B139232
MATERIAL:17-4 PH SIZE: 6.50" X 4.100" LONG

Line Total: **$1,150.00**

SP15-11-23

Note:

Castle Metals®

A. M. Castle & Co.

PACKING SLIP/
CERTIFICATE OF CONFORMANCE

Shipment No:2797290

Ship From:	Sold To:	Ship To:	Deliver To:
A. M. Castle & Co. (Canada) Inc. TORONTO - CASTLE METALS 2150 ARGENTIA ROAD MISSISSAUGA, ON L5N 2K7	DART AEROSPACE LTD 1270 ABERDEEN HAWKESBURY, ON K6A 1K7 CA	DART AEROS,HAWKESBURY,ON,CAN 1270 ABERDEEN HAWKESBURY, ON K6A 1K7 CAN	DART AEROSPACE LTD 1270 ABERDEEN HAWKESBURY, ON K6A 1K7 CA

Date Shipped	F.O.B.	Freight Terms	Carrier	BOL No
20-NOV-2015	ORIGIN	Prepaid	MANITOULIN	2797290-2

Shipment Details	Final Destination Branch - TOR

Order No	Line No	Item No	Description
4142600	2	15003MO	6.5000.RD.17CR-4NI.STAINLESS.RT.SOL TR.COND A.120.0000-168.0000 CUT TO 4.1 IN (+ .1250/- .0000 IN) - BAND SAW CUTTING SPECIFICATIONS: AMS 5643 Email P/s and certs to: clavoie@dartaero.com

Purchase Order No	Part Number	Ordered Qty	Invoice Qty
30498	YOUR ITEM NUMBER: D6104-011	10.00 PCS	10.00 PCS

Details	
	ALL PAPERWORK MUST FOLLOW ORDER / CUSTOMER MUST RECEIVE AT TIME OF DELIVERY ALL MATERIAL MUST HAVE IDENTIFYING MARKINGS EX:HEAT #'S Email P/s and certs to: clavoie@dartaero.com END USER: DART AEROSPACE END USE: COMMERCIAL AIRCRAFT PARTS

80152-11-23

Delivery No.	Mill	Heat Number	Mech Id	PCS	Width (IN)	Length (IN)	Shipped Qty(LBS)
120252732		266057		10			400.4532

These commodities/technologies are subject to US Export Administration & US State Dept. Regulations and, if intended for export, were/are exported thereunder. Diversion contrary to US Law is Prohibited.

These commodities, technology or software were exported from the United States in accordance with the Export Administration Regulations. Diversion contrary to US law prohibited.

Date Printed: 20-NOV-2015 05:15:43 PM

VALBRUNA
SLATER STAINLESS, INC.
2400 TAYLOR STREET WEST - PO BOX 630
FORT WAYNE IN 46802 USA
PHONE 260.434.2800 - FAX 260.434.2801

Product Certification Report

Report Number: 5128410

Certified on Apr 10, 2015

Order I.D.	Order Date	Commodity Code			
1500266 001	2/04/15				
Dim 1	Dim 2	Dim 3	Heat I.D.	Customer I.D.	Customer Purchase Order
6.5000	.0000	.0000	266057	001809	27128
Product Shape	Product Surface				Customer Grade
Rounds	HR & Rough Turned				630
Length (Inches)		Bill of Lading #	Weight		
120.000 Min. 168.000 Max.		424682			

Ship To
VALBRUNA CANADA LTD.
8724 HOLGATE CRESCENT
MILTON, ONTARIO L9T5Z1

DAS 14 9-89 | 5/11/24

Sold To
VALBRUNA CANADA LTD.
8724 HOLGATE CRESCENT
MILTON, ONTARIO L9T5Z1

Lifts: 0027

AISI 630
UNS S17400
ASMESA 564 13

Condition A
ASTMA 484-14a
AMS 2303F

3174-02 REV 39
ASTMA 564-13
AMS 5643T (except finish)

CHEMICAL ANALYSIS

C	Mn	P	S	Si	Cr	Ni	Mo	Cu	N	Cb	Ta	Cb+Ta
.041	.49	.025	.025	.41	15.73	4.33	.23	3.37	.03	.30	.000	.299

BRINELL (Type A device used)

HBW
350

TENSILE PROPERTIES ASTM E8-13a

CAPABILITY

Cap HB	TS (PSI)	.2%YS (PSI)	%EL(4d)	%RA	AGE(F)
422	201000	177900	14.5	52.1	900

MAGNETIC PARTICLE TEST AMS2303

	FREQ	SEV
AVG	.00	.00

MACRO ASTM E340-13/E381-01

MACRO
OK
OK
OK

PERCENT FERRITE (AMS 2315)

	% FERRITE	Etchant	Magnification X
AVG	.5	Marbles	100

Reduction ratio 5 To 1 Min.
Electric Furnace melted; AOD refined.
Ultrasonic tested to ASTM A388- Satisfactory.
Chemical testing to one or more of the listed ASTM methods:
E415-14, E1019-11, E1086-14.
Location of tensile fracture: inside middle of gage length.
Chemical Analysis performed at Acciaierie Valbruna, Italy.
No mercury or low melting alloy contamination. No weld repair.
Material melted in Italy, manufactured in the United States.

I hereby certify that the reported figures are correct as contained in the records of the corporation.

Manager Laboratory Services Dennis Hackett

Dennis Hackett

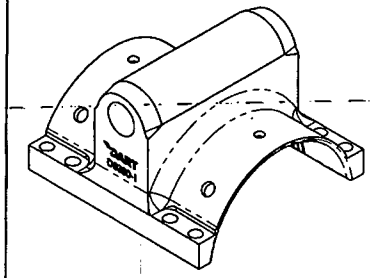

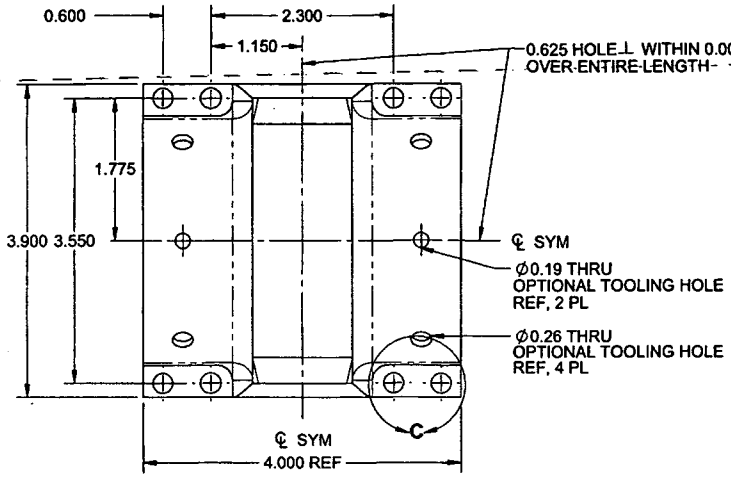

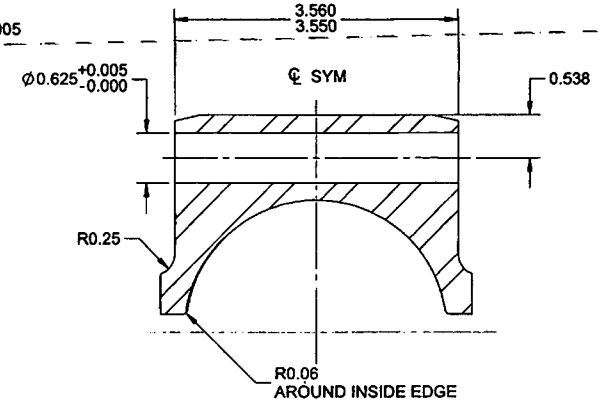

SECTION B-B

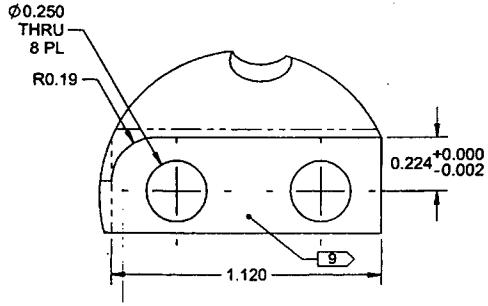

DETAIL C
SCALE 2X
4 PL

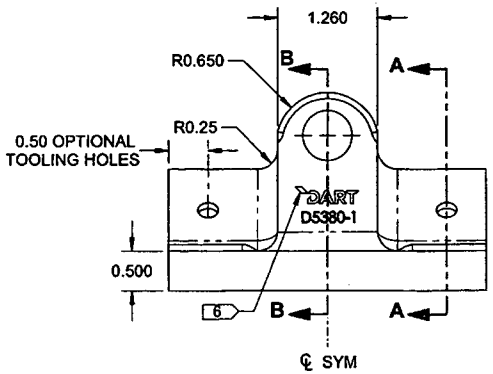

D5380-1 SUPPORT

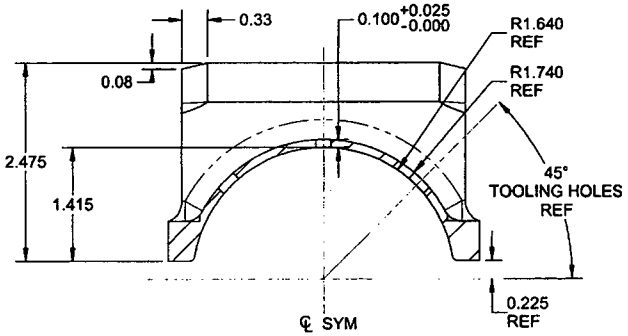

SECTION A-A

NOTES:
1) MATERIAL: MAKE FROM D5380-1TRN
2) FINISH: NONE
3) TOLERANCES: PER DART QSI 018 UNLESS OTHERWISE NOTED
4) UNITS: INCHES UNLESS OTHERWISE NOTED
5) BREAK SHARP EDGES: 0.005 TO 0.010 MAX
6) IDENTIFICATION: DART LOGO AND P/N WITH 0.125 HIGH LETTERING AND 0.005-0.010 DEEP PER DART QSI 044 6.3
7) WEIGHT: 2.09 lbs
8) PROFILE ALL NON DIMENSIONED FEATURES PER CAD FILE "D5380-1-REVA.STP"
9) REMOVE MATERIAL FLUSH TO FACE

RELEASED
2016 -05- 19
ECN 16-565

APPROVED

REV.	DESCRIPTION	BY	DATE
A	NEW ISSUE	ML	16.01.05

DESIGN	ML	DART AEROSPACE LTD HAWKESBURY, ONTARIO, CANADA
DRAWN	ML	
CHECKED	AJS	DRAWING NO. D5380 — REV. A
MFG. APPR.	RQ	SHEET 1 OF 4
APPROVED	DW	TITLE: SUPPORT — SCALE: NTS
DE APPR.	DS	
DATE	16.01.05	

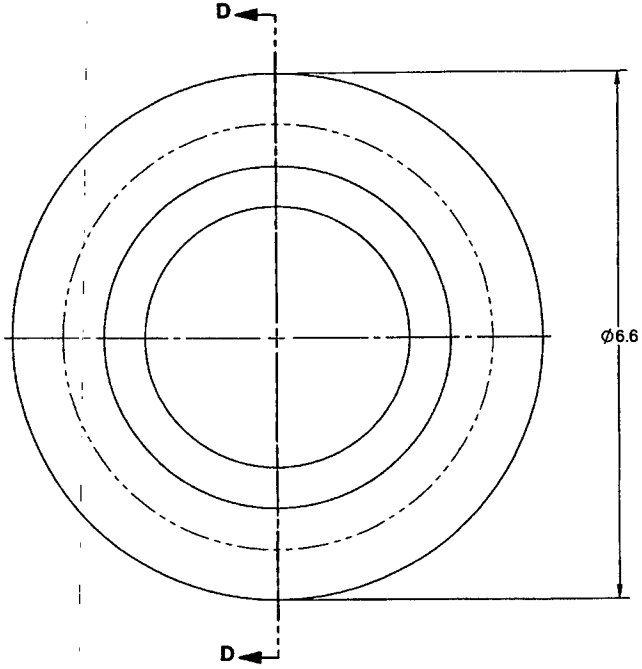

D5380-1TRN

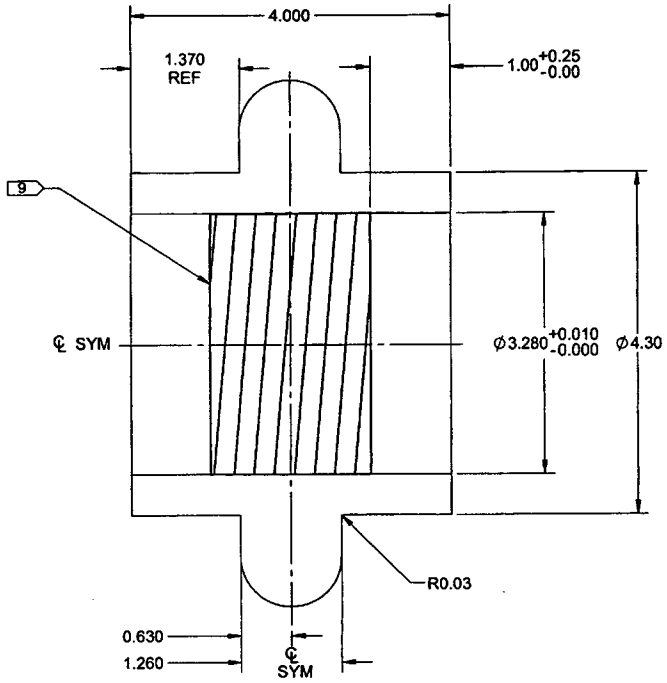

SECTION D-D

NOTES:
1) MATERIAL: 17-4 PH/S17400/TYPE 630 ROUND BAR PER AMS 5643 / ASTM A564
H900 OR H925 CONDITION, MIN UTS = 170 KSI (38 HRc)
REF DART SPEC. M17-4-R
2) FINISH: NONE
3) TOLERANCES: PER DART QSI 018 UNLESS OTHERWISE NOTED
4) UNITS: INCHES UNLESS OTHERWISE NOTED
5) BREAK SHARP EDGES: 0.005 TO 0.010 MAX
6) IDENTIFICATION: IDENTIFY PER DART QSI 044
7) WEIGHT: 13.21 lbs
8) PROFILE ALL NON DIMENSIONED FEATURES PER CAD FILE "D5380-1TRN-REVA.STP"
9) SURFACE IS TO BE THREADED USING R0.032 TOOLING AT A DEPTH OF $0.032^{+0.000}_{-0.016}$ WITH A PITCH OF $0.125^{+0.010}_{-0.010}$

RELEASED
2016 -05- 19

APPROVED

DESIGN	ML	**DART AEROSPACE LTD** HAWKESBURY, ONTARIO, CANADA
DRAWN	ML	DRAWING NO. D5380 — REV. A — SHEET 2 OF 4
CHECKED	AJS	
MFG. APPR.	RQ	
APPROVED	DW	TITLE: SUPPORT — SCALE: NTS
DE APPR.	DS	
DATE	16.01.05	

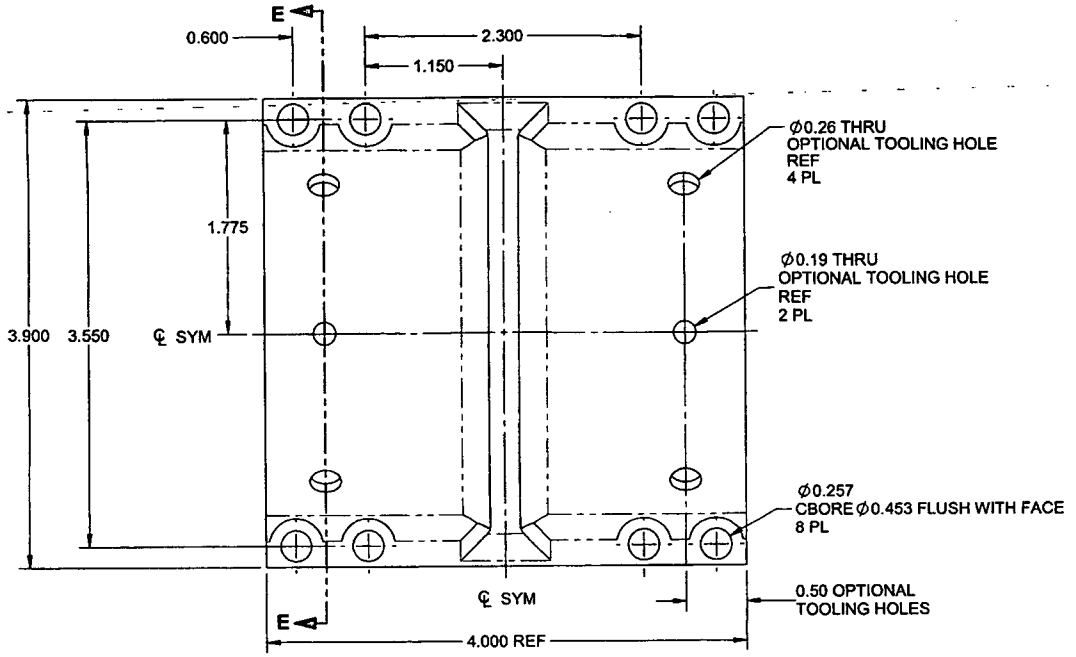

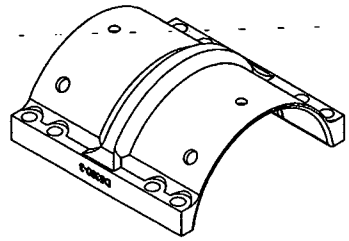

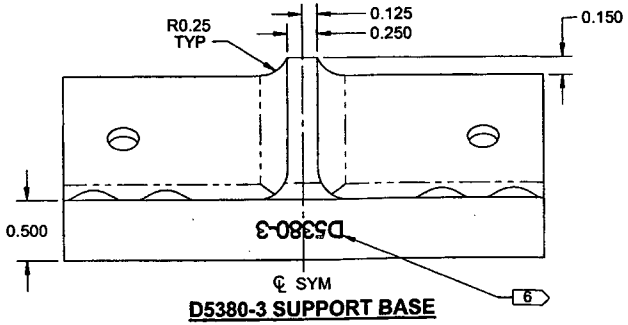

D5380-3 SUPPORT BASE

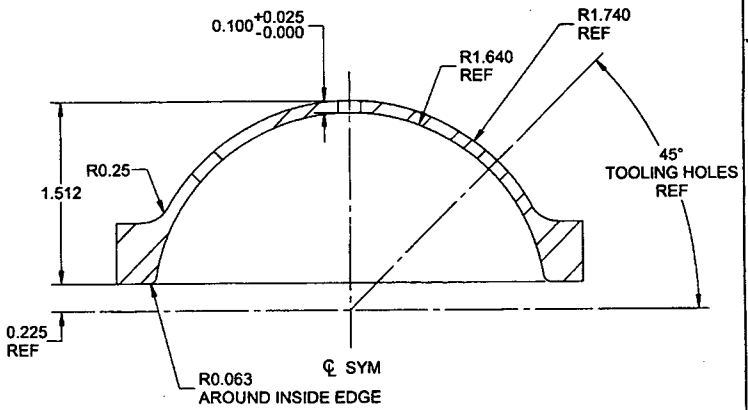

SECTION E-E

NOTES:
1) MATERIAL: MAKE FROM D5380-3TRN
2) FINISH: NONE
3) TOLERANCES: PER DART QSI 018 UNLESS OTHERWISE NOTED
4) UNITS: INCHES UNLESS OTHERWISE NOTED
5) BREAK SHARP EDGES: 0.005 TO 0.010 MAX
6) IDENTIFICATION: DART P/N WITH 0.125 HIGH LETTERING AND 0.005-0.010 DEEP PER DART QSI 044 6.3
7) WEIGHT: 0.89 lbs
8) PROFILE ALL NON DIMENSIONED FEATURES PER CAD FILE "D5380-3-REVA.STP"

RELEASED
2016 -05- 19

APPROVED

DESIGN	ML	DART AEROSPACE LTD
DRAWN	ML	HAWKESBURY, ONTARIO, CANADA
CHECKED	AJS	DRAWING NO. D5380 — REV. A
MFG. APPR.	RQ	SHEET 3 OF 4
APPROVED	DW	TITLE: SUPPORT — SCALE: NTS
DE APPR.	DS	
DATE	16.01.05	

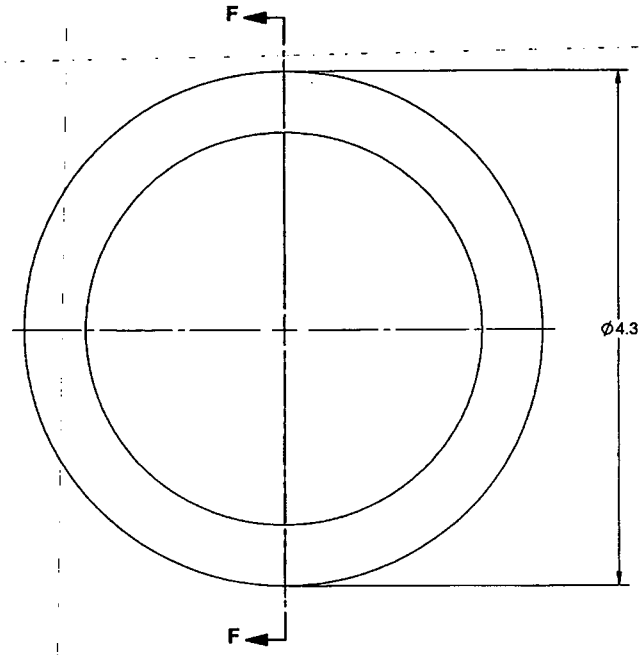

D5380-3TRN

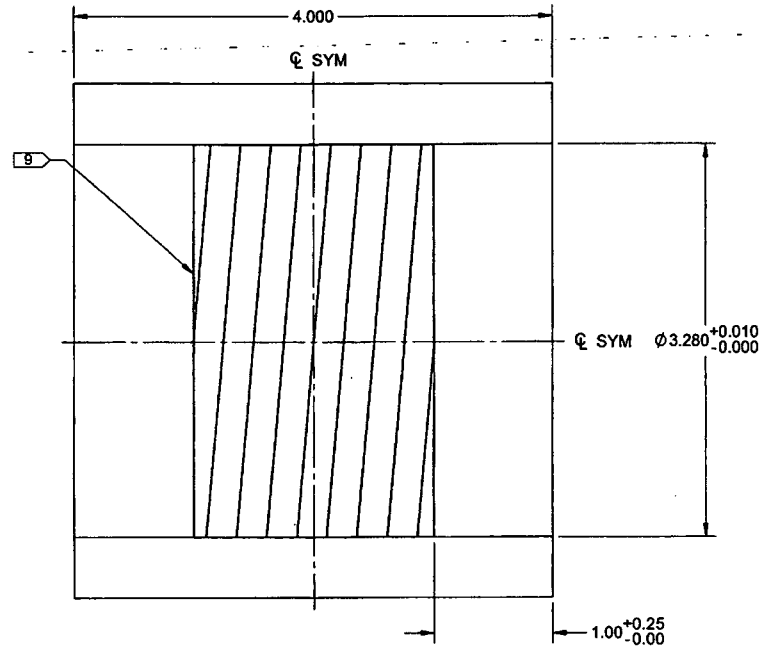

SECTION F-F

NOTES:
1) MATERIAL: 17-4 PH/S17400/TYPE 630 ROUND BAR PER AMS 5643 / ASTM A564
H900 OR H925 CONDITION, MIN UTS = 170 KSI (38 HRc)
REF DART SPEC. M17-4-R
2) FINISH: NONE
3) TOLERANCES: PER DART QSI 018 UNLESS OTHERWISE NOTED
4) UNITS: INCHES UNLESS OTHERWISE NOTED
5) BREAK SHARP EDGES: 0.005 TO 0.010 MAX
6) IDENTIFICATION: IDENTIFY PER DART QSI 044
7) WEIGHT: 7.02 lbs
8) PROFILE ALL NON DIMENSIONED FEATURES PER CAD FILE "D5380-3TRN-REVA.STP"
9) SURFACE IS TO BE THREADED USING R0.032 TOOLING AT A DEPTH OF 0.032 $^{+0.000}_{-0.016}$ WITH A PITCH OF 0.125 $^{+0.010}_{-0.010}$

RELEASED
2016 -05- 19

APPROVED

DESIGN	ML	DART AEROSPACE LTD HAWKESBURY, ONTARIO, CANADA
DRAWN	ML	DRAWING NO. D5380 — REV. A
CHECKED	AJS	SHEET 4 OF 4
MFG. APPR.	RQ	TITLE: SUPPORT — SCALE: NTS
APPROVED	DW	
DE APPR.	DS	
DATE	16.01.05	